| Centre Number | Candidate Number | Name |
|---|---|---|
| | | |

UNIVERSITY OF CAMBRIDGE INTERNATIONAL EXAMINATIONS
General Certificate of Education
Advanced Subsidiary Level and Advanced Level

**PHYSICS** **9702/03**

Paper 3 Practical Test

May/June 2005

**1 hour 15 minutes**

Candidates answer on the Question Paper.
Additional Materials: As specified in the Confidential Instructions.

**READ THESE INSTRUCTIONS FIRST**

Write your Centre number, candidate number and name on all the work you hand in.
Write in dark blue or black pen in the spaces provided on the Question Paper.
You may use a soft pencil for any diagrams, graphs or rough working.
Do not use staples, paper clips, highlighters, glue or correction fluid.

Answer the **one** question.

You are expected to record all your observations as soon as these observations are made, and to plan the presentation of the records so that it is not necessary to make a fair copy of them. The working of the answers is to be handed in.
Marks are mainly given for a clear record of the observations actually made, for their suitability and accuracy, and for the use made of them.
Additional answer paper and graph paper should be submitted only if it becomes necessary to do so.
You are reminded of the need for good English and clear presentation in your answers.

At the end of the examination, fasten all your work securely together.

If you have been given a label, look at the details. If any details are incorrect or missing, please fill in your correct details in the space given at the top of this page.

Stick your personal label here, if provided.

| For Examiner's Use |
|---|
| |

This document consists of **6** printed pages and **2** blank pages.


© UCLES 2005

For Examiner's Use

**1** In this question you will investigate how the force required to maintain equilibrium of a suspended mass depends on the angle between the line of action of the force and the horizontal.

You are supplied with a piece of string that has a loop at each end and one in the middle.

**(a)** **(i)** Suspend the mass from the middle loop and attach the other loops to a mounted boss and a newton-meter as shown in Fig. 1.1. The body of the newton-meter must be clamped so that it is along the line of action of force *F*. You may need to rotate the clamp in order to achieve this. The section AB of the string should be horizontal and the bases of the stands should be clamped to the bench.

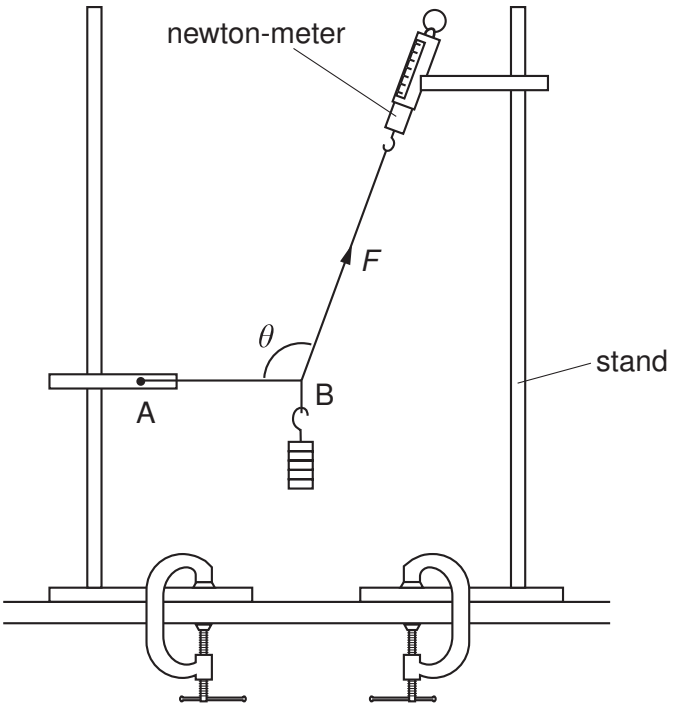


**Fig. 1.1**

© UCLES 2005

**(ii)** Using the protractor, measure the angle $\theta$. Record the value of $\theta$ and the reading $F$ from the newton-meter.

$\theta$ = .....

$F$ = .....

**(iii)** Determine the percentage uncertainty in the value of $\theta$.

percentage uncertainty in $\theta$ = .....

**(b)** State two difficulties that you had when making measurements of $F$ and $\theta$.

1 .....

.....

2 .....

.....

© UCLES 2005



**[Turn over**

**(c)** Change the height of one of the bosses above the bench and adjust the separation of the stands to give new values of $\theta$ and *F*. The section AB must remain horizontal. You will need to loosen a G-clamp in order move a stand. Measure and record the new values of $\theta$ and *F*. Repeat the procedure until you have six sets of readings for $\theta$ and *F*. You **must** ensure that, when you are taking readings, the body of the newton-meter is along the line of action of the force *F* and that it does not go off scale.

Include all six sets of values of *F*, $\theta$ and 1/sin $\theta$ in your table of results.

**(d)** Plot a graph of *F* (*y*-axis) against 1/sin $\theta$ (*x*-axis) and draw the best straight line through the points.

**(e)** Determine the gradient and *y*-intercept of the line.

gradient = .....

*y*-intercept = .....

© UCLES 2005

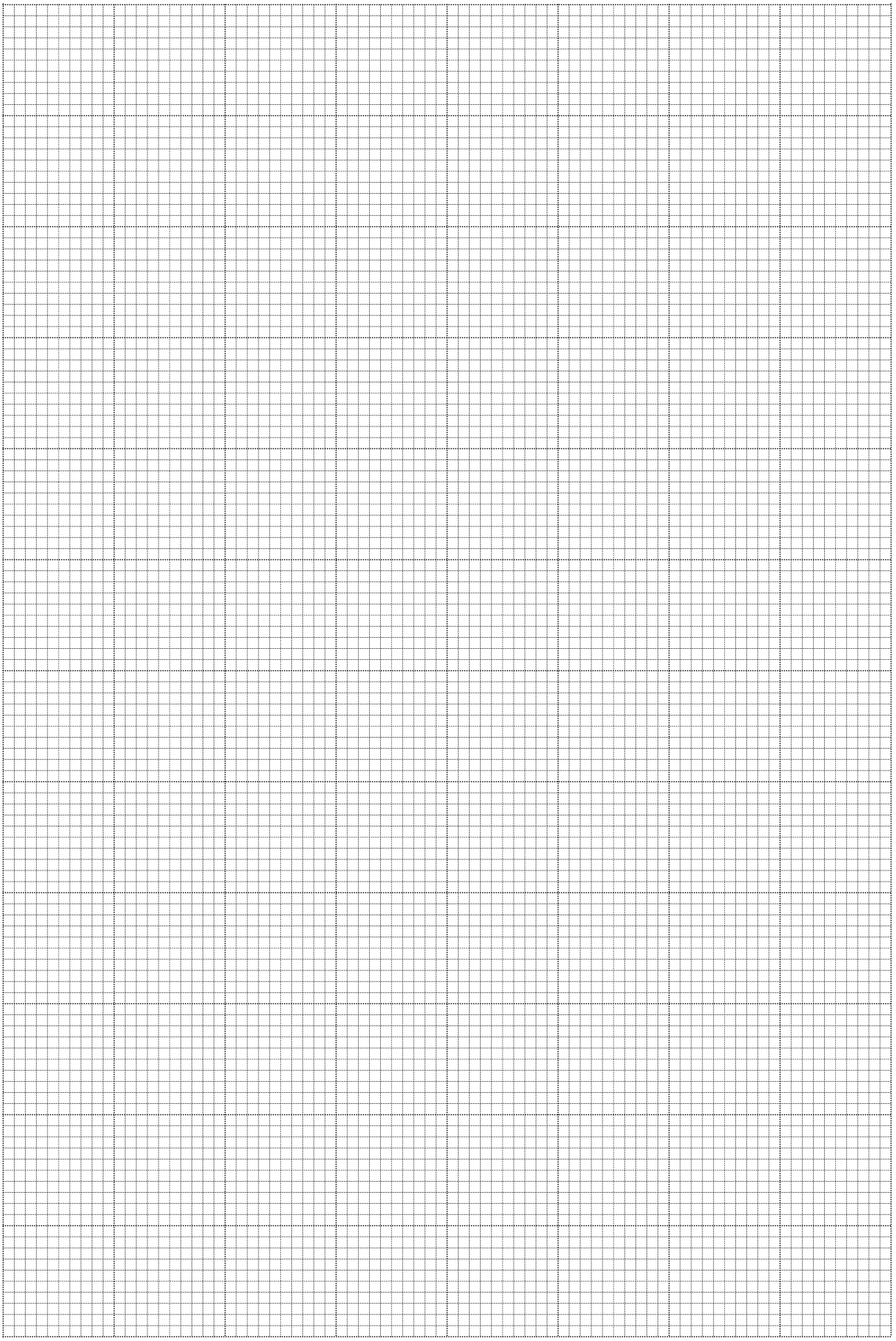

For Examiner's Use

**(f)** The equation that relates $F$ and $\theta$ is

$$F = \frac{mg}{\sin\theta} + k$$

where $m$ is the mass of the load, $k$ is a constant and $g$ is the acceleration of free fall. You may take the value of $g$ to be 9.81 m s$^{-2}$.

Use your answers from **(e)** to determine values for $m$ and $k$. Include appropriate units.

$m$ = .....

$k$ = .....

© UCLES 2005

**BLANK PAGE**

**BLANK PAGE**

Permission to reproduce items where third-party owned material protected by copyright is included has been sought and cleared where possible. Every reasonable effort has been made by the publisher (UCLES) to trace copyright holders, but if any items requiring clearance have unwittingly been included, the publisher will be pleased to make amends at the earliest possible opportunity.

University of Cambridge International Examinations is part of the University of Cambridge Local Examinations Syndicate (UCLES), which is itself a department of the University of Cambridge.